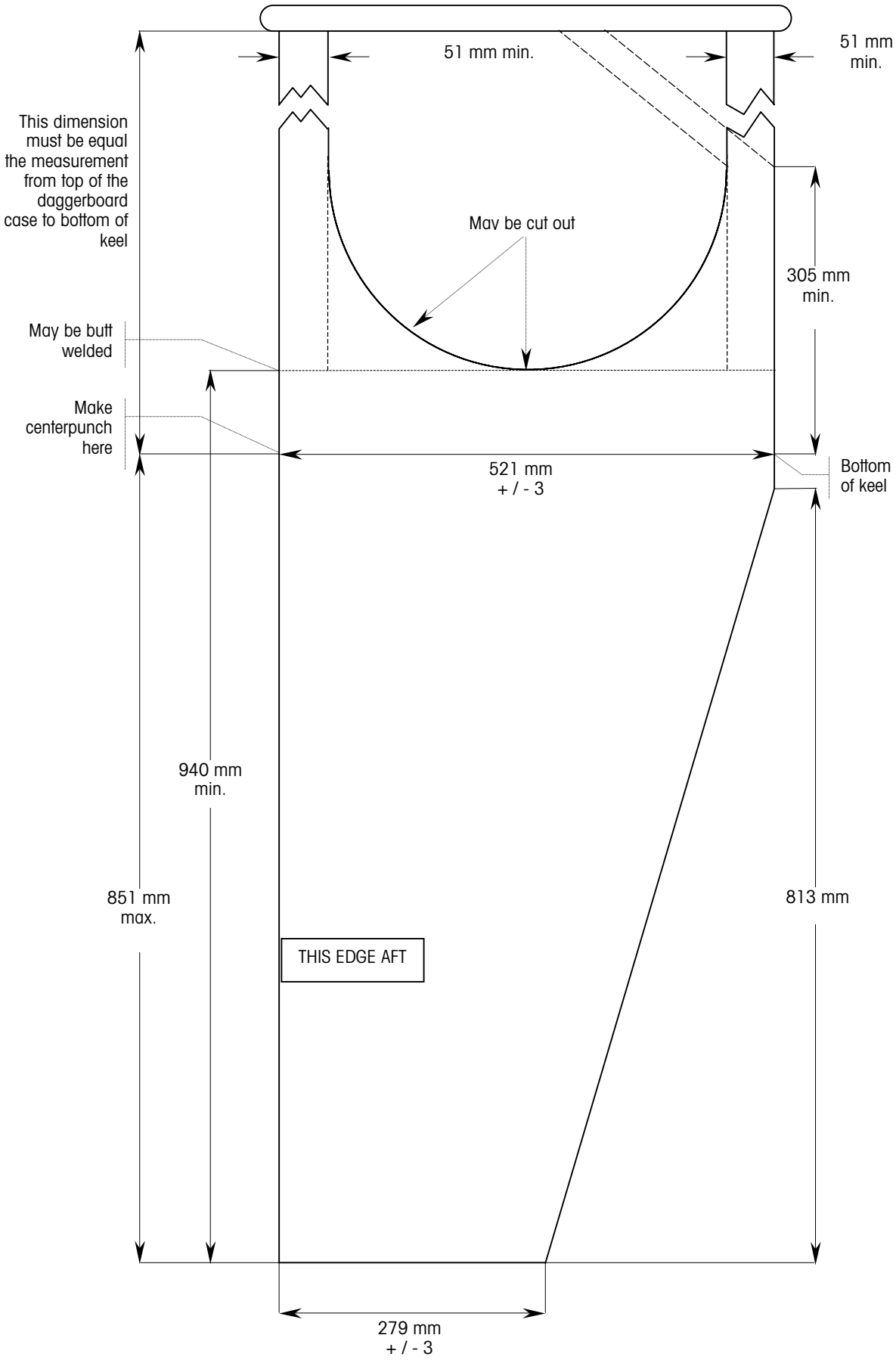
51 mm min.
51 mm min.
This dimension must be equal the measurement from top of the daggerboard case to bottom of keel
May be cut out
305 mm min.
May be butt welded
Make centerpunch here
521 mm + / - 3
Bottom of keel
940 mm min.
851 mm max.
813 mm
THIS EDGE AFT
279 mm + / - 3